Wire Colour Coding

Red	+12V DC
Red	+12V DC
Black	Ground
Black	Ground
Green	TTL Input 1
White	TTL Input 2
Pink	TTL Input 3
Grey	TTL Input 4
Yellow/Black	Output 1 (TTL)
Pink/Black	Output 2 (Open Collector)
Orange/Black	Output 3 (TTL)
Yellow/White	RS485A
Green/White	RS485B
Purple/White	Relay Normal Close
Orange/White	Relay Common
Blue/White	Relay Normal Open

Note:

- A short cable assembly with four way connector is built in HSM. Do Not connect it to any wire.

- Wiring methods shall be in accordance with the Electrical wiring regulation in your country / region.

- Check your circuit diagram for the colour coding of the circuit wiring. The reader can be damaged beyond repair if the wiring is connected incorrectly. This will void the warranty.

- For correct wiring diagram for your application, see overleaf for connection diagram that is applicable to your application. Alternatively, please contact your distributor or BQT office.

- Insulate all un-used wires (do not terminate).

External Use

- Make sure the wire bundle to the device has an IP rating of at least IP65

Handling

- Handle the device with care. DO NOT damage or drop unit before installation. This will void the warranty.
- If the case is damaged, the device may not be to the specified IP rating. Replace the device if the case is damaged.

Specifications

Power requirement	11VDC to 13VDC (nominal operating voltage 12VDC)
Current consumption	60mA (Average) 100mA (Peak)
Relay Rating	Maximum 1A @ 12VDC
Operating temperature	-25°C to +65°C (-13°F to +149°F)
Relative humidity	90% max, operating non-condensing
Dimensions	65mm(L) x 26.3mm(W) x 20.5mm(D) (2.56" x 1.04" x 0.81")
Status LED	Green & Red
Colour finish	Charcoal
IP rating	IP65

© 2015 BQT Solutions (Australia) Pty Limited. All rights reserved.

BQT Solutions (Australia) Pty Limited will not be liable for any direct, indirect, incidental or consequential loss or damage in any way related to this product. BQT Solutions (Australia) Pty Limited reserves the right to upgrade or change this product or instruction manual without prior notice. BQT Solutions (Australia) Pty Limited assumes no liability for damages incurred directly or indirectly from errors, omissions or discrepancies between the product and the manual.

The product is designed by BQT Solutions (Australia) Pty Limited.

For more information and contact details please visit,

www.bqtsolutions.com

Regulatory Information

C-Tick: This device is C-Tick complied.

CE: The device has passed all relevant tests and obtained CE approval.

FCC: This device is FCC complied.

Warranty

Unless specified otherwise, the Company warrants to the Customer that' BQT Solutions Branded Products' (excluding third party products and software) are covered by a return to base warranty on defects in materials and workmanship affecting normal use for a period of the Warranty offered under the Standard Terms and Conditions of Sale from BQT invoice date ('Standard Warranty')

This standard warranty does not cover damage, fault, failure or malfunction due to external causes including; accident, misuse, problems with electrical power, servicing not authorised by the Company, usage and/or storage and/or installation not in accordance with Product instructions, failure to perform required preventative maintenance, normal wear and tear, act of God, fire, flood, war, any violent or similar occurrence; any attempt by any person other than Company personnel or any person authorised by the Company to repair or support the Products and problems caused by use of parts and components not supplied by the Company. The standard warranty does not cover any items that are in one or more of the following categories: software; external devices; accessories or parts added to the product after the product has been shipped from BQT Solutions.

During the warranty, period beginning on the invoice date, the Company will repair or replace faulty products (at its absolute discretion) returned to its' factory. The Customer must prepay shipping and transportation costs and insure the shipment or accept the risk of loss or damage during such transportation.

The Customer shall be solely responsible for determining suitability for use and the Company will, in no event, be liable in this respect. This standard warranty is given in place of all warranties, conditions, terms, undertakings and obligations implied by statute, common law, trade usage, and course of dealing or otherwise including warranties or conditions of merchantability, fitness for purpose, satisfactory quality and / or compliance with description, all of which are hereby excluded to the fullest extent permitted by law.

bqt SOLUTIONS An Ava Group Company

miPASS

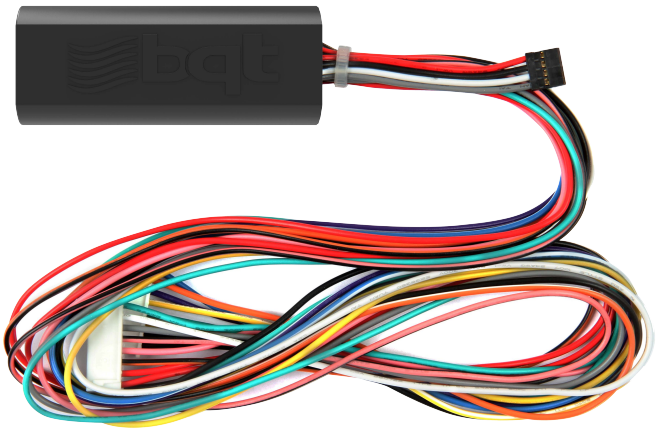

HSM / Converter

INSTALLATION GUIDE

Rev 003

Designed & Developed In Australia

Connection Diagram

Note: The application of HSM is firmware depended. This manual only specifies the connection diagram for High Security Module Application.
If your application isn't listed below, please contact your distributor or BQT office for correct connection diagram.
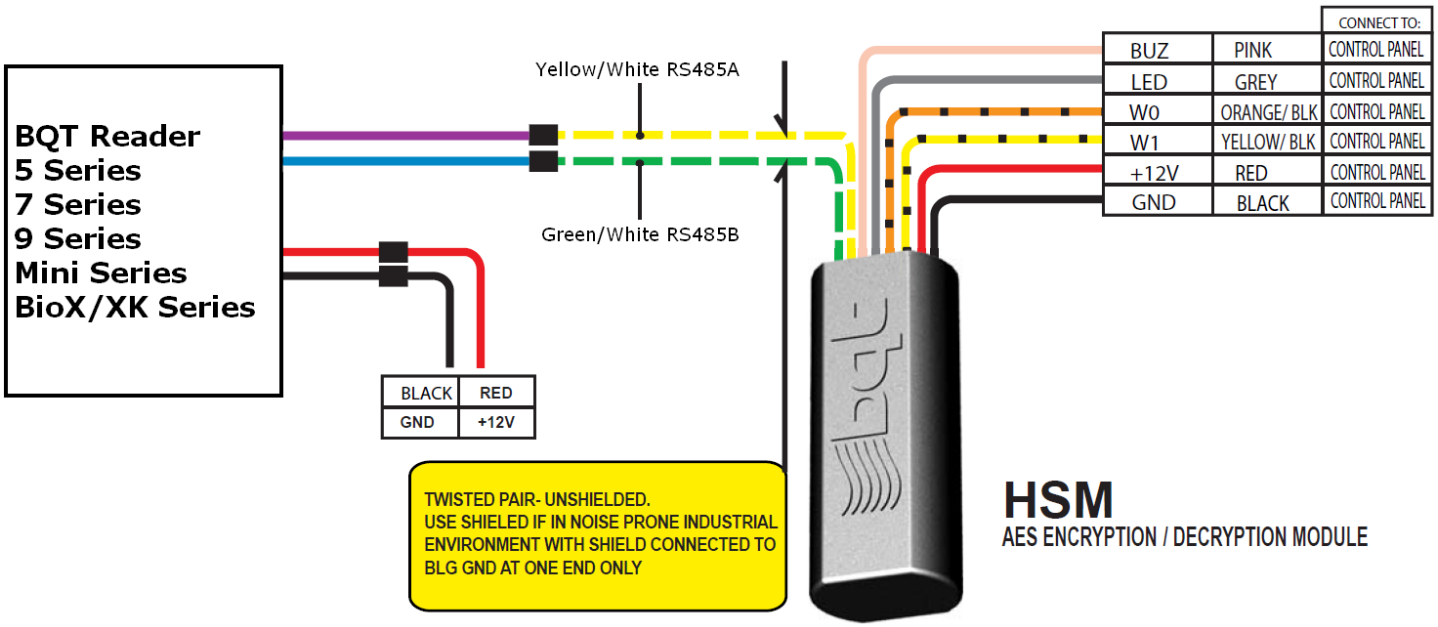
High Security Module (HSM) Application